Eterna

PA661

T +34 938 521 000
www.benito.com

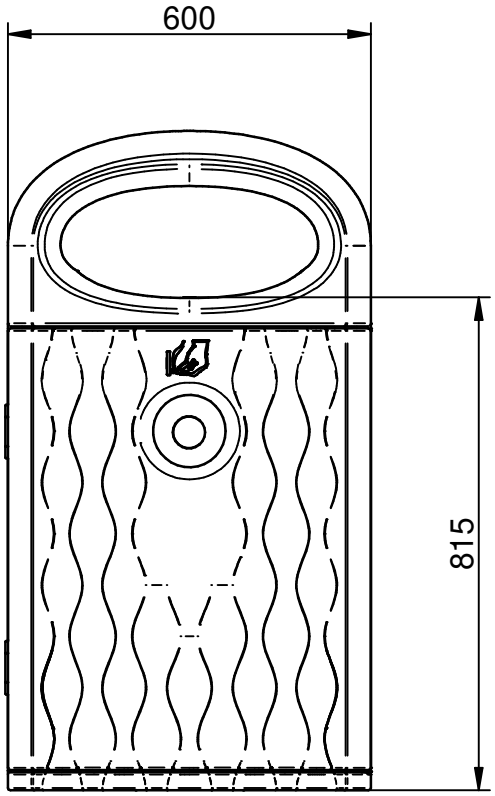

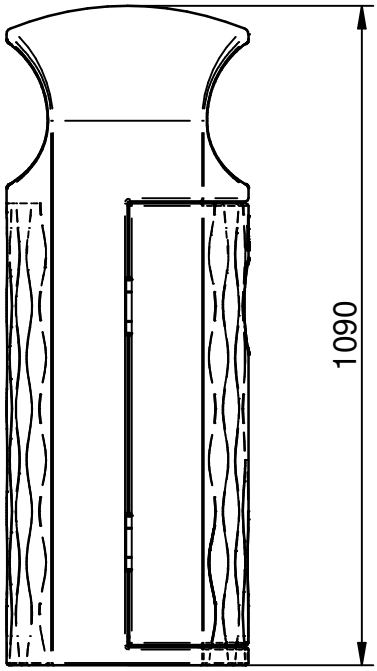

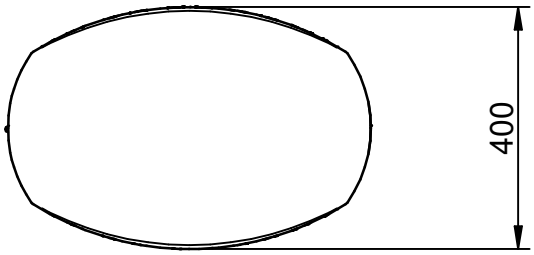

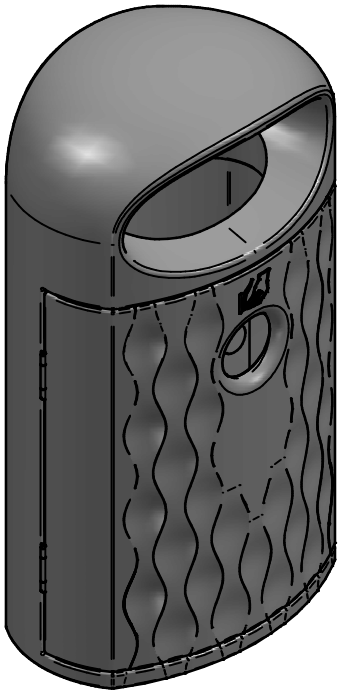

V 1 08/04/2021