BENITO –Covers

City
TH40D4N

T +34 938 521 000
www.benito.com

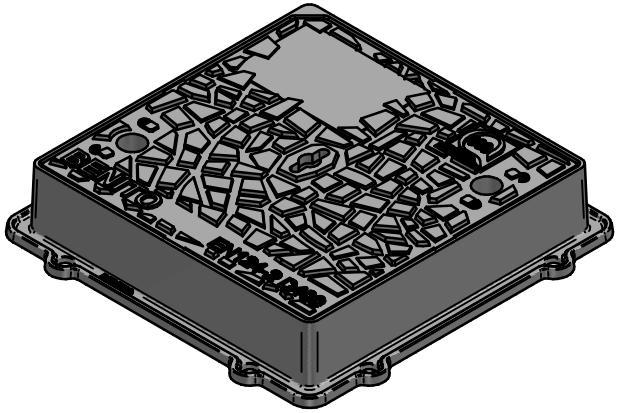

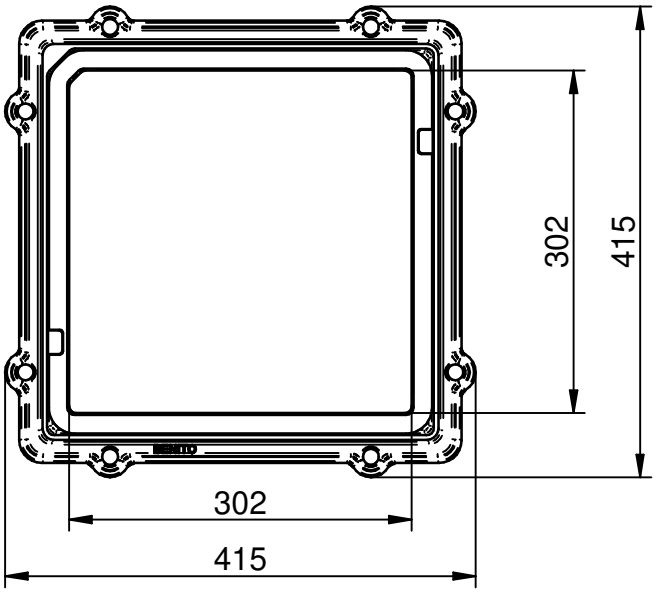

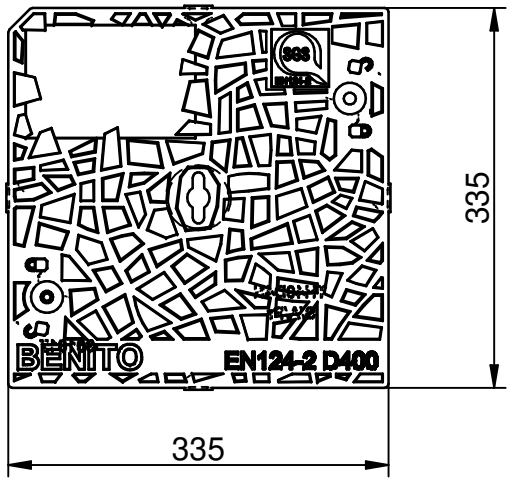

V 05 05/11/2020

BENITO –Covers

City
TH50D4N

T +34 938 521 000
www.benito.com

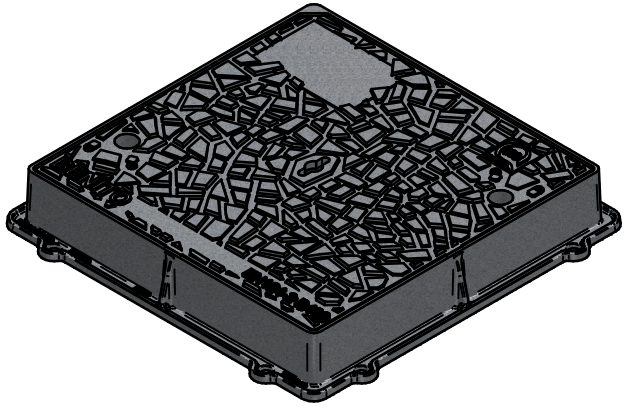

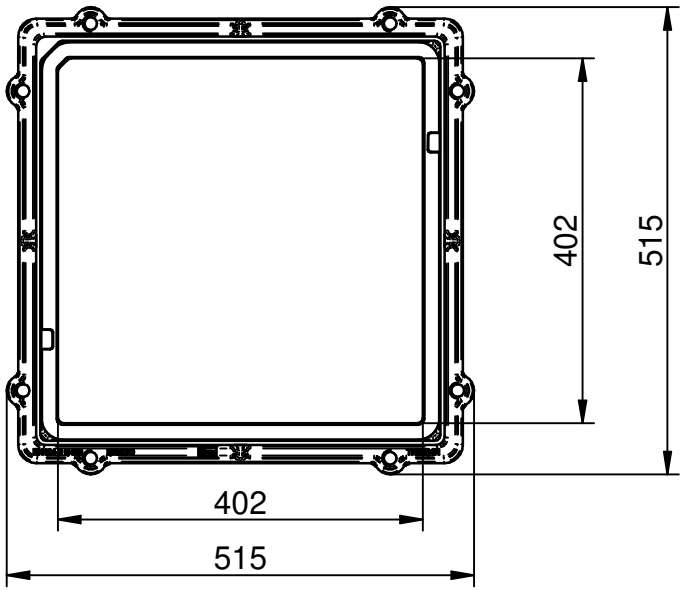

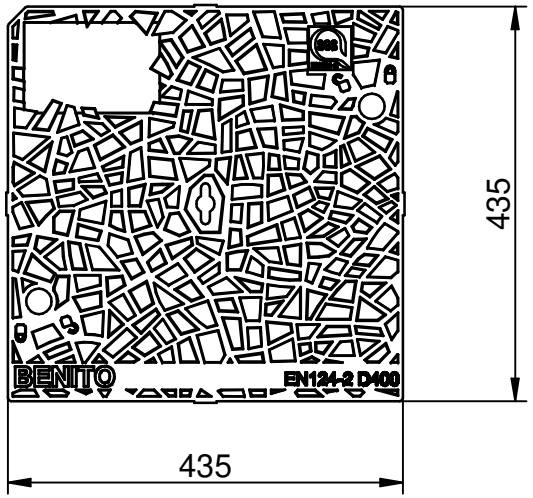

V 06 05/11/2020

BENITO –Covers

City
TH60D4N

T +34 938 521 000
www.benito.com

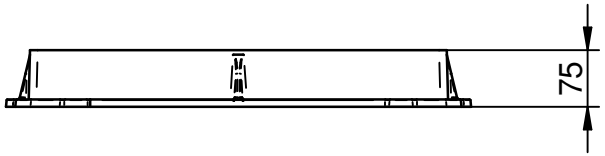

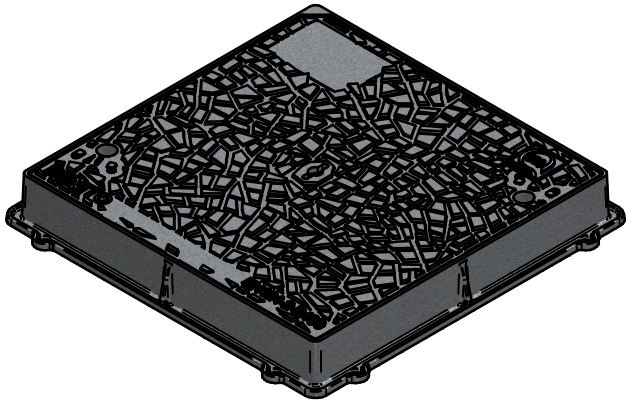

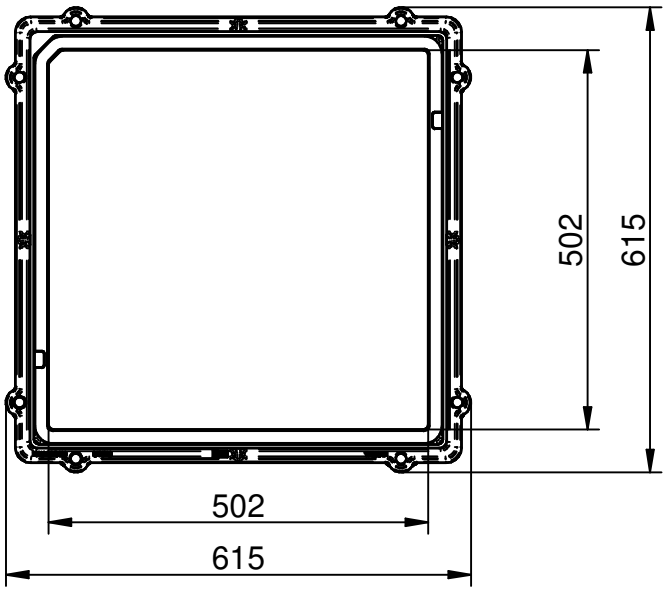

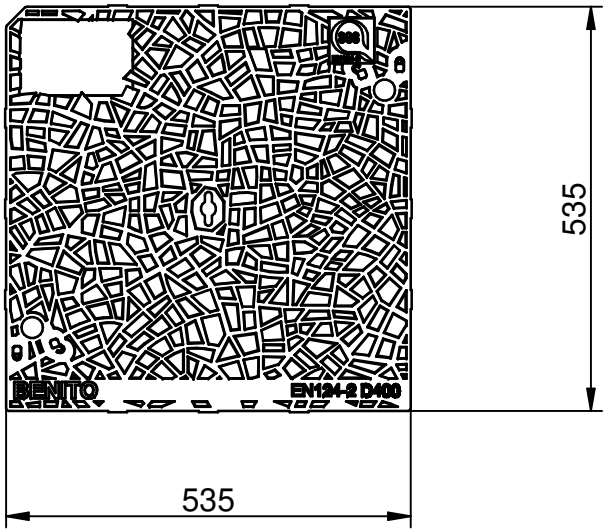

V 05 06/11/2020

BENITO –Covers

City

TH70D4N

T +34 938 521 000
www.benito.com

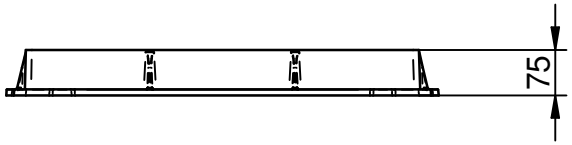

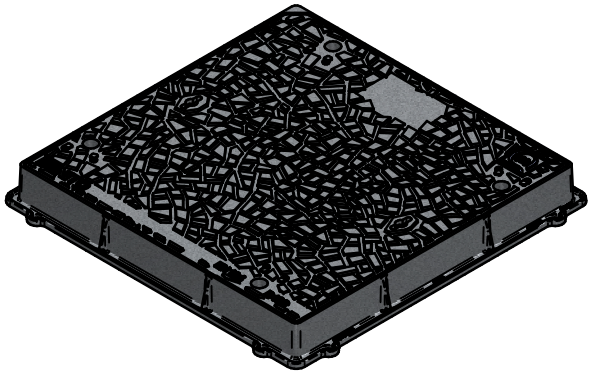

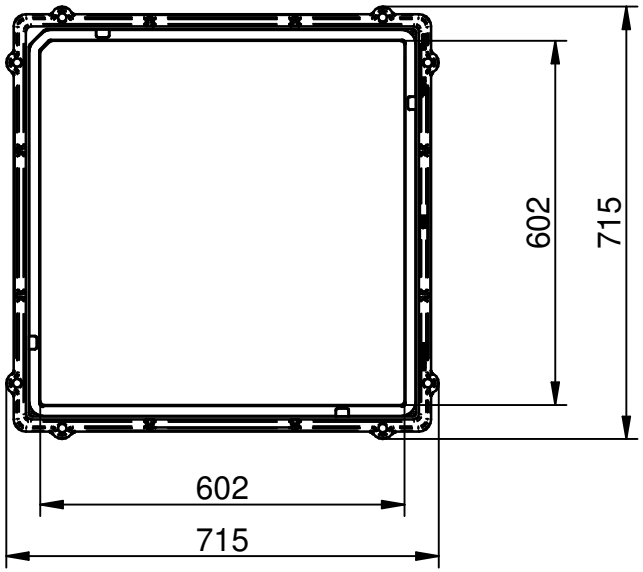

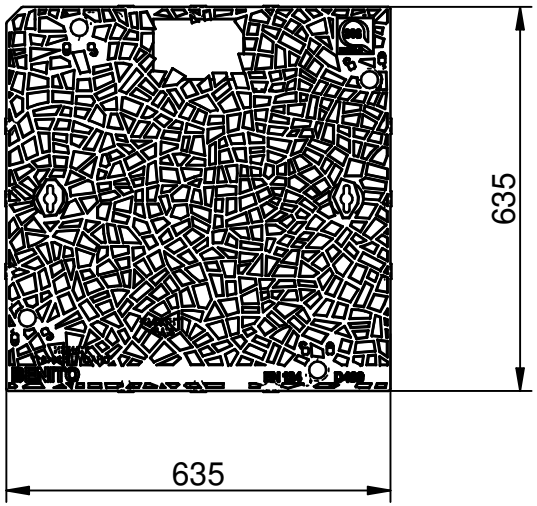

V 02 06/11/2020

BENITO –Covers

City
TH80D4N

T +34 938 521 000
www.benito.com

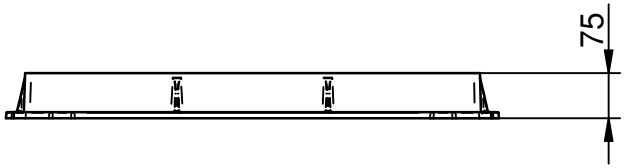

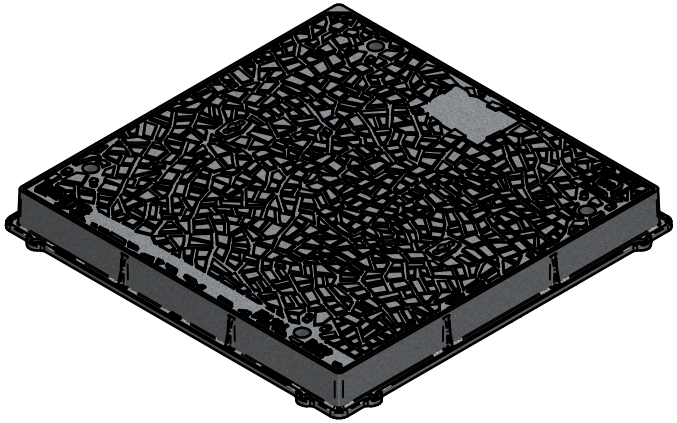

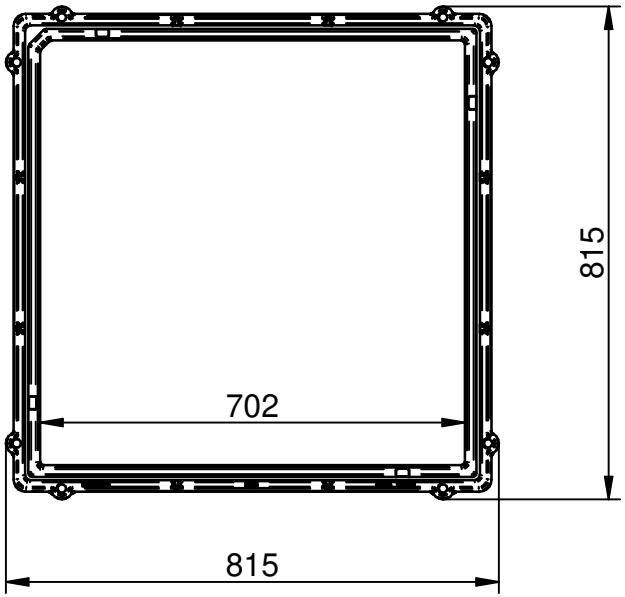

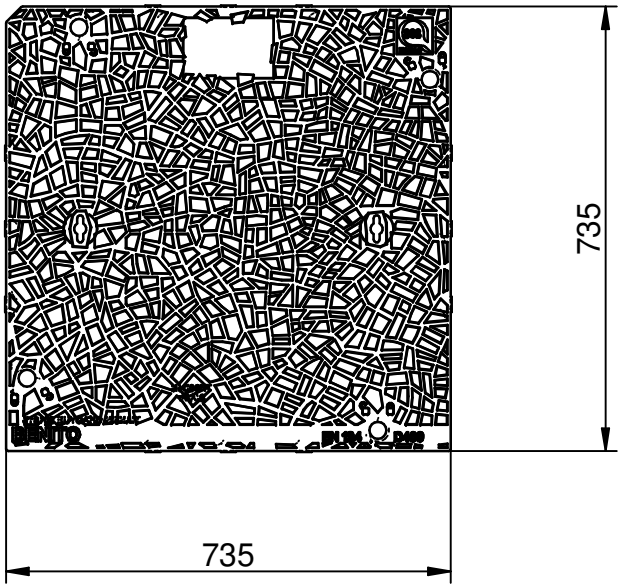

76,5

V 04 06/11/2020

BENITO –Covers

City
TH100D4N

T +34 938 521 000
www.benito.com

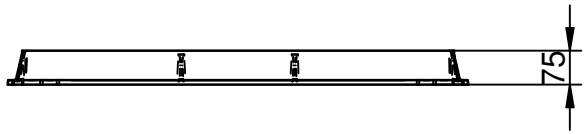

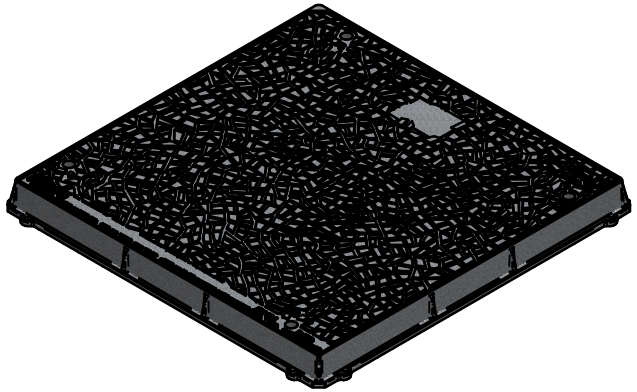

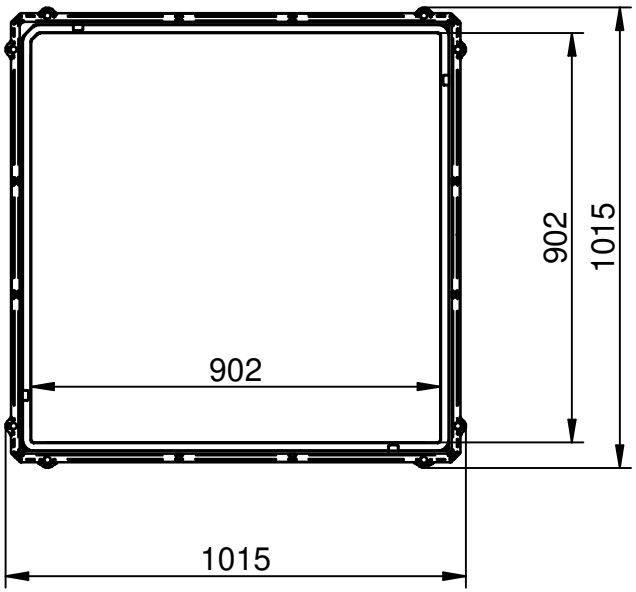

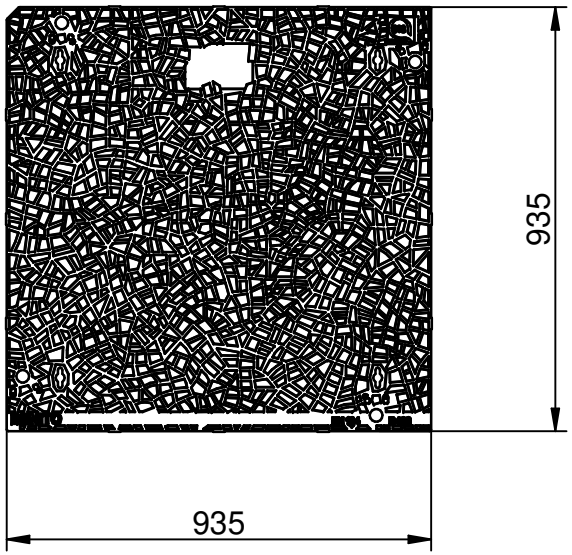

V 02 06/11/2020